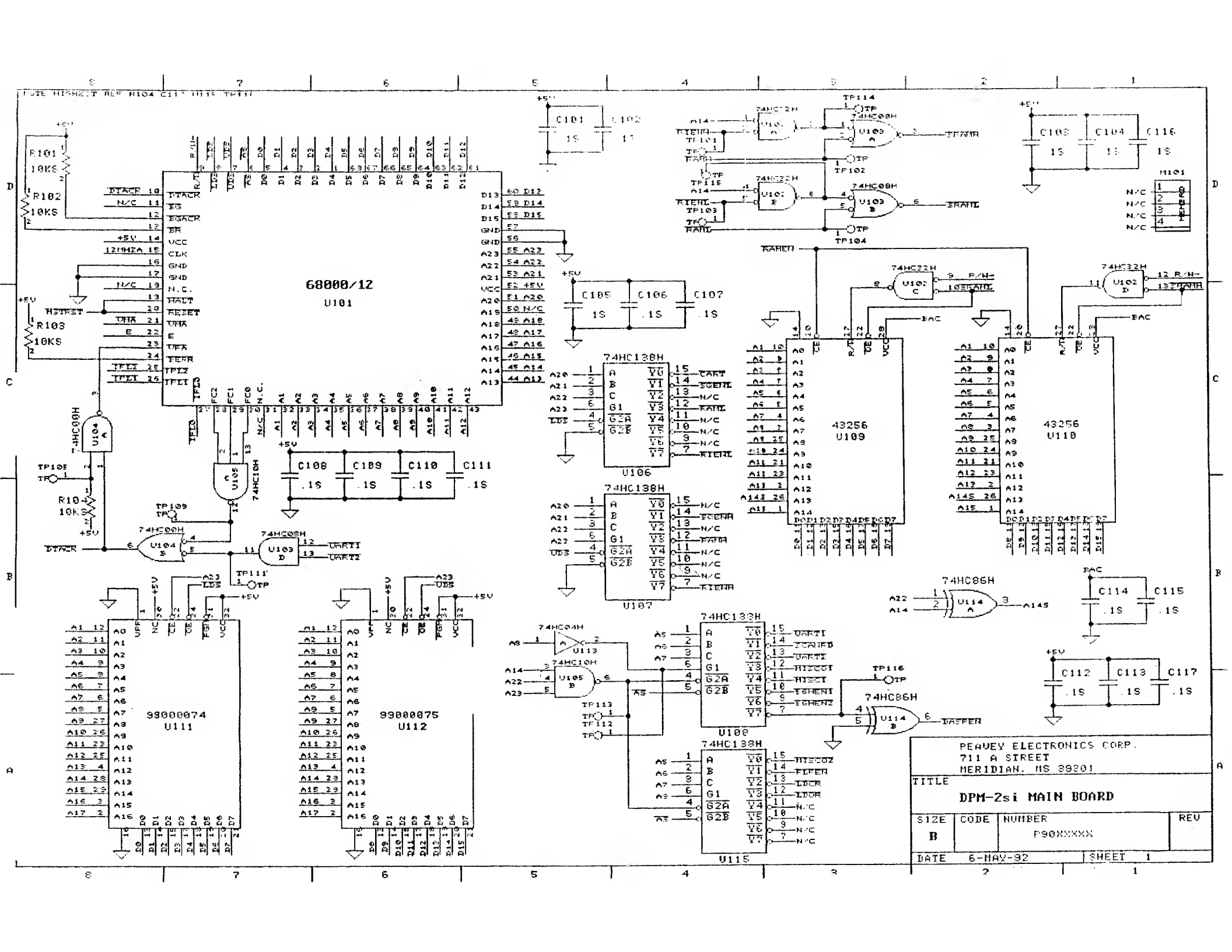
68000/12
U101
99000074
U111
99000075
U112
43256
U109
43256
U110
U106
U107
U108
U115
PEAVEY ELECTRONICS CORP.
711 A STREET
MERIDIAN, MS 39301
TITLE
DPM-2si MAIN BOARD
SIZE
B
CODE
NUMBER
P90XXXXX
REV
DATE
6-MAY-92
SHEET
1

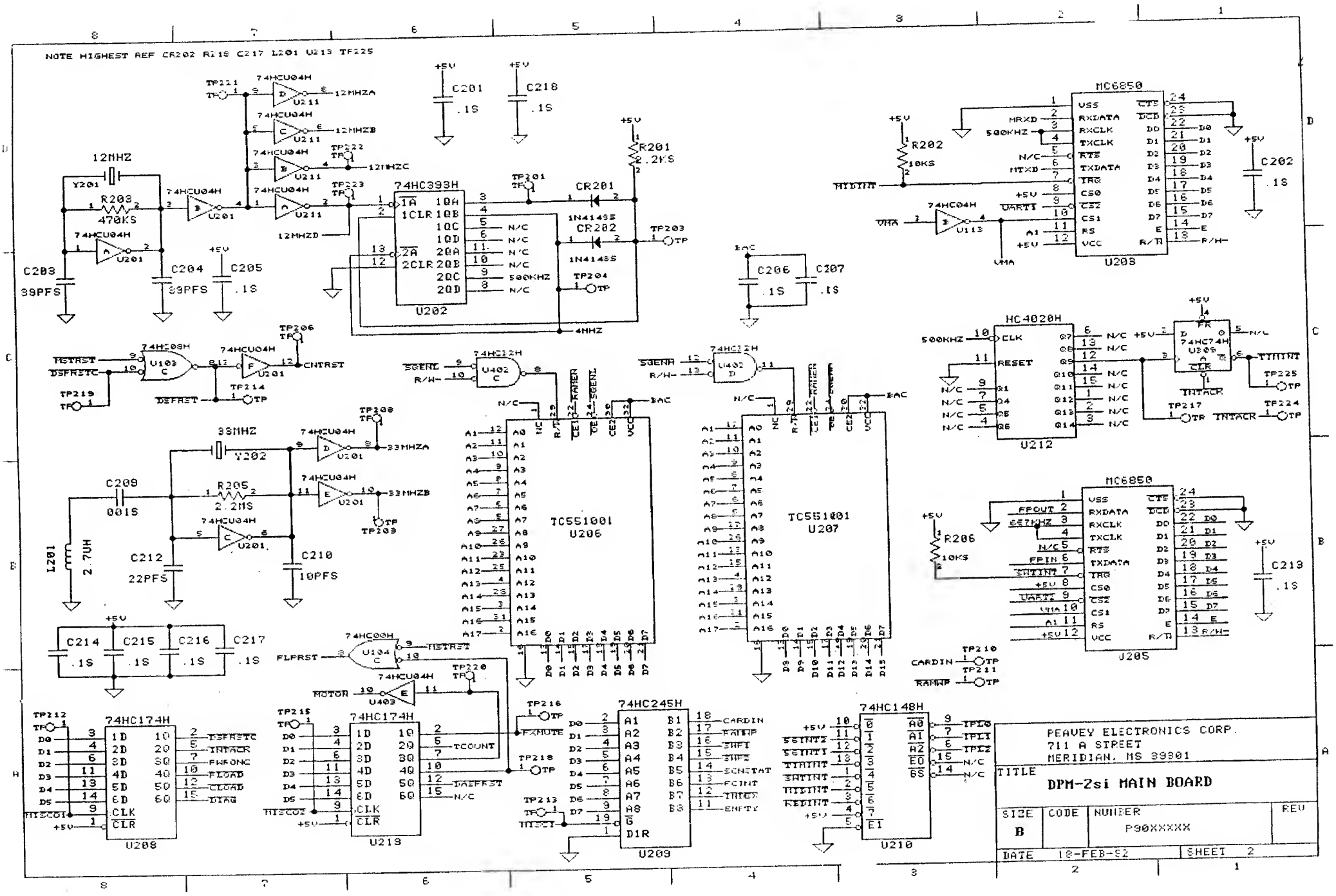
NOTE HIGHEST REF CR202 R218 C217 L201 U213 TP225
74HC393H
U202
74HC04H
U201
74HC08H
U103
74HC32H
U402
TC551001
U206
TC551001
U207
MC6850
U208
HC4020H
U212
74HC74H
U209
MC6850
U205
74HC174H
U208
74HC174H
U213
74HC245H
U209
74HC148H
U210
PEAVEY ELECTRONICS CORP.
711 A STREET
MERIDIAN, MS 39301
TITLE
DPM-2si MAIN BOARD
SIZE
B
CODE
NUMBER
P90XXXXX
REV
DATE
18-FEB-92
SHEET
2

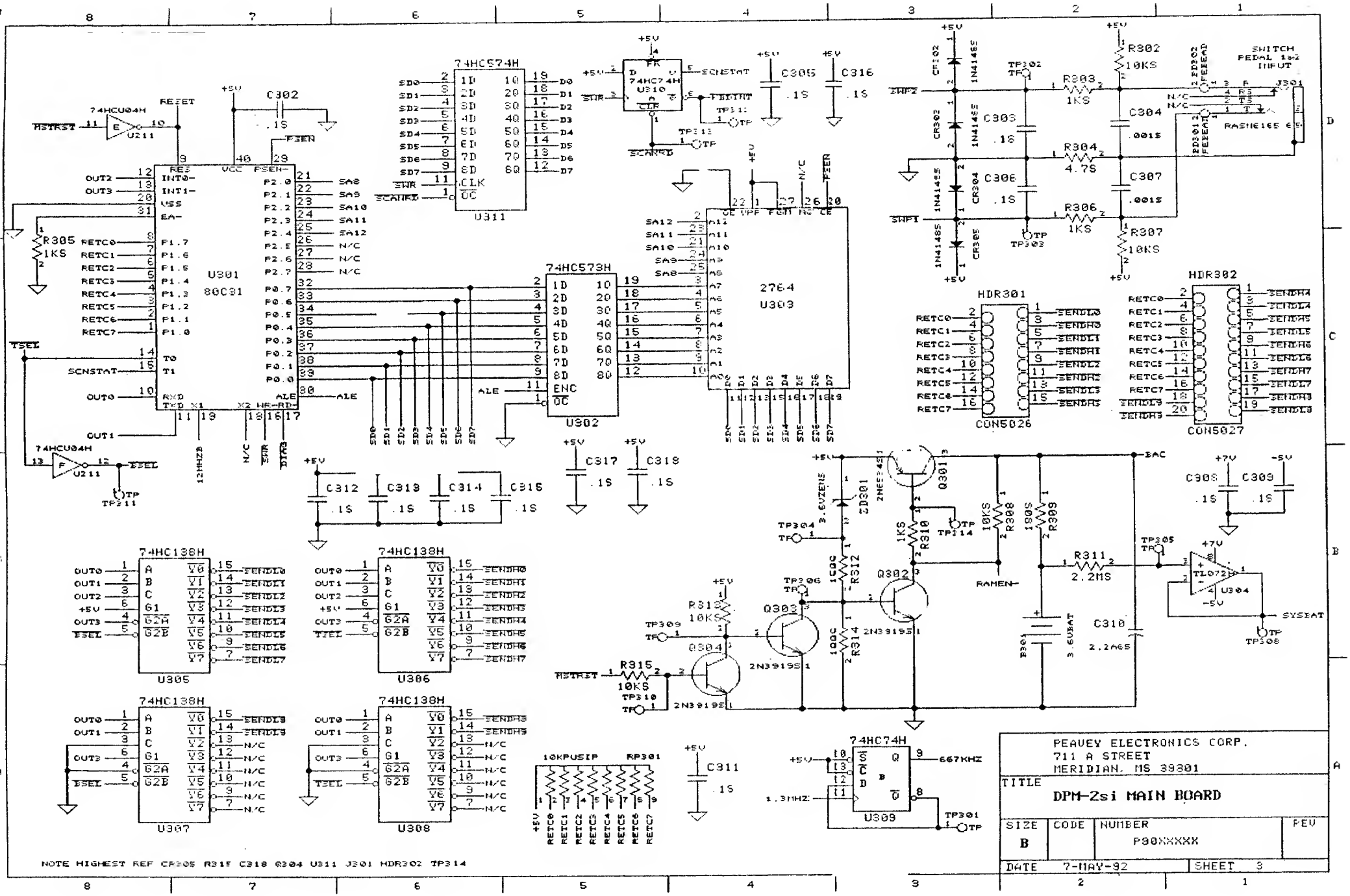

74HCU04H
U211
U301
80C91
74HC574H
U311
74HC573H
U302
74HC74H
U310
2764
U303
HDR301
CON5026
HDR302
CON5027
SWITCH PEDAL 1&2 INPUT
J301
RASN6165
74HC138H
U305
U306
U307
U308
74HC74H
U309
TL072
U304
Q301
Q302
Q303
Q304
2N3919S
ZD301
10KPUSIP
RP301
BAC
SYSBAT
RAMEN
667KHZ
1.3MHZ
NOTE HIGHEST REF CR305 R315 C318 Q304 U311 J301 HDR302 TP314
PEAVEY ELECTRONICS CORP.
711 A STREET
MERIDIAN, MS 39301
TITLE
DPM-2si MAIN BOARD
SIZE
B
CODE
NUMBER
P90XXXXX
REV
DATE
7-MAY-92
SHEET
3

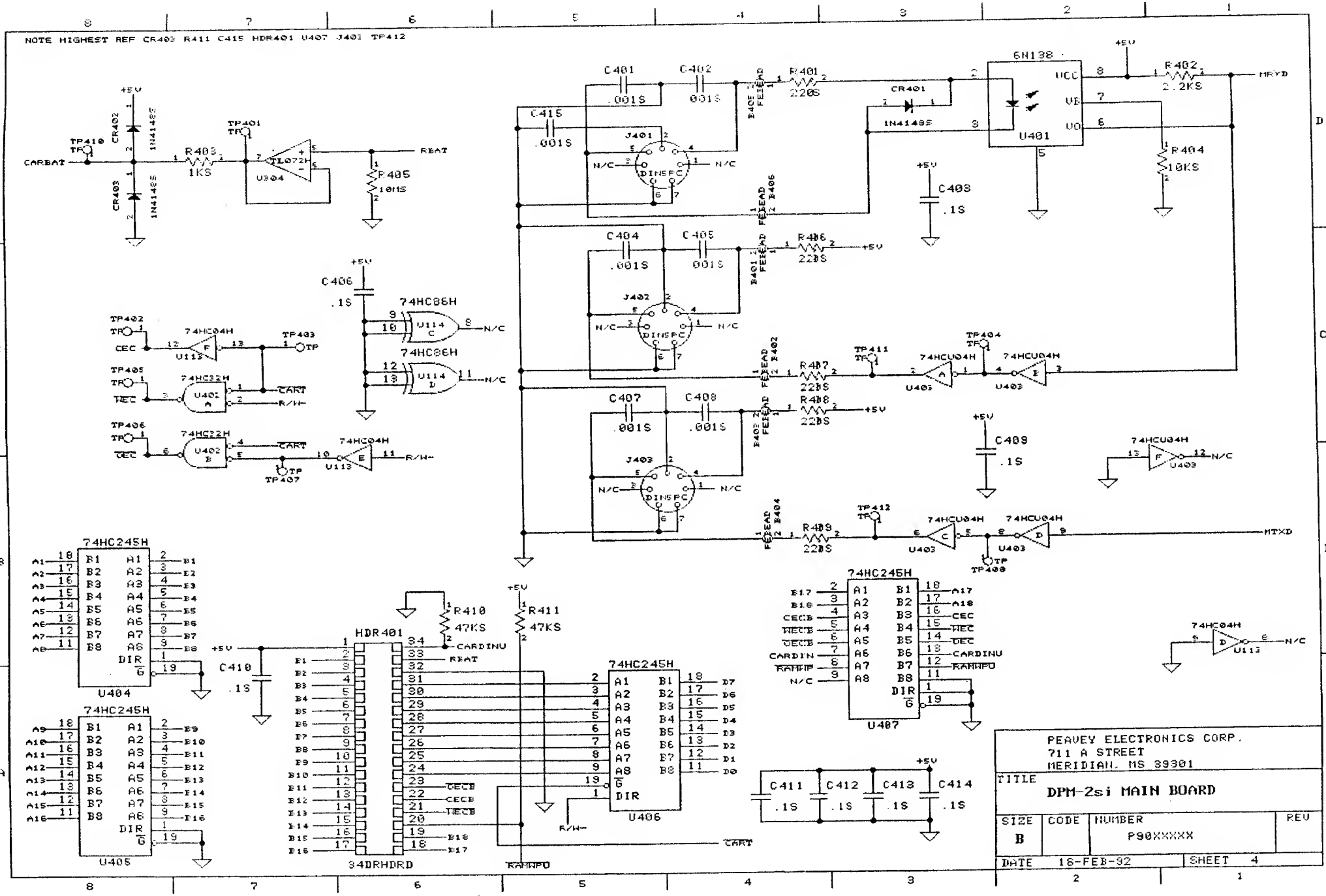
NOTE HIGHEST REF CR403 R411 C415 HDR401 U407 J403 TP412
PEAVEY ELECTRONICS CORP.
711 A STREET
MERIDIAN, MS 39301
TITLE
DPM-2si MAIN BOARD
SIZE
B
CODE
NUMBER
P90XXXXX
REV
DATE 18-FEB-92
SHEET 4
6N138
U401
74HC245H
U404
U405
U406
U407
HDR401
34DRHDRD
74HC86H
74HCU04H
74HC04H
74HC32H
74HC86H
CARBAT
RBAT
MRYD
MTXD
CARDINU
RAMWPU
CART
R/W-
CEC
CECB
WECB
CARDIN
RAMWP
N/C
+5V

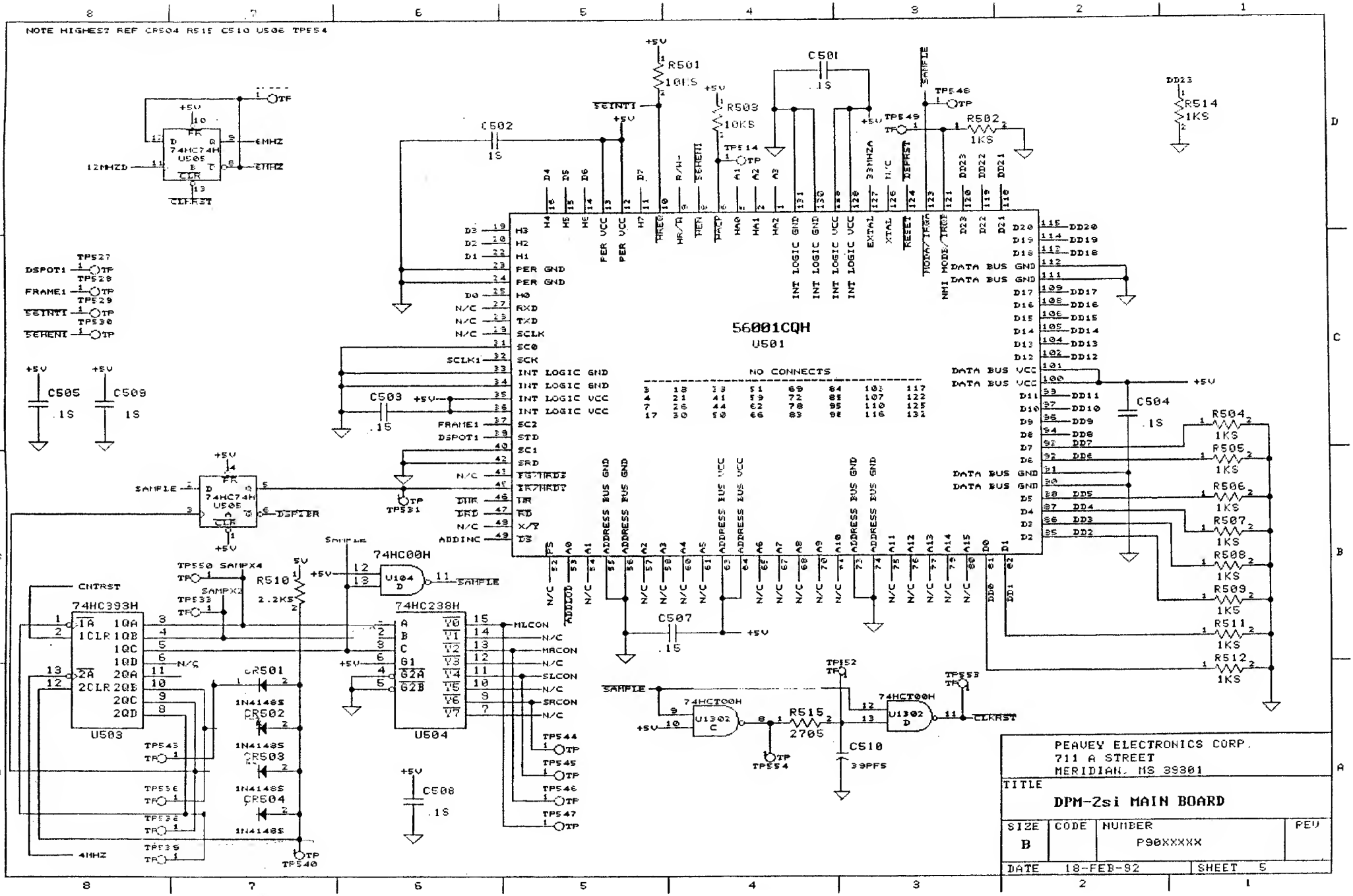
NOTE HIGHEST REF CR504 R515 C510 U506 TP554
56001CQH
U501
NO CONNECTS
74HC74H
U505
74HC393H
U503
74HC238H
U504
74HC00H
U104
74HCT00H
U1302
R501
10KS
R503
10KS
R502
1KS
R514
1KS
R504
1KS
R505
1KS
R506
1KS
R507
1KS
R508
1KS
R509
1KS
R511
1KS
R512
1KS
R510
2.2KS
R515
2705
C501
.1S
C502
1S
C503
.15
C504
.1S
C505
.1S
C507
.15
C508
.1S
C509
1S
C510
39PFS
CR501
CR502
CR503
CR504
1N4148S
PEAVEY ELECTRONICS CORP.
711 A STREET
MERIDIAN, MS 39301
TITLE
DPM-2si MAIN BOARD
SIZE
B
CODE
NUMBER
P90XXXXX
REV
DATE 18-FEB-92
SHEET 5

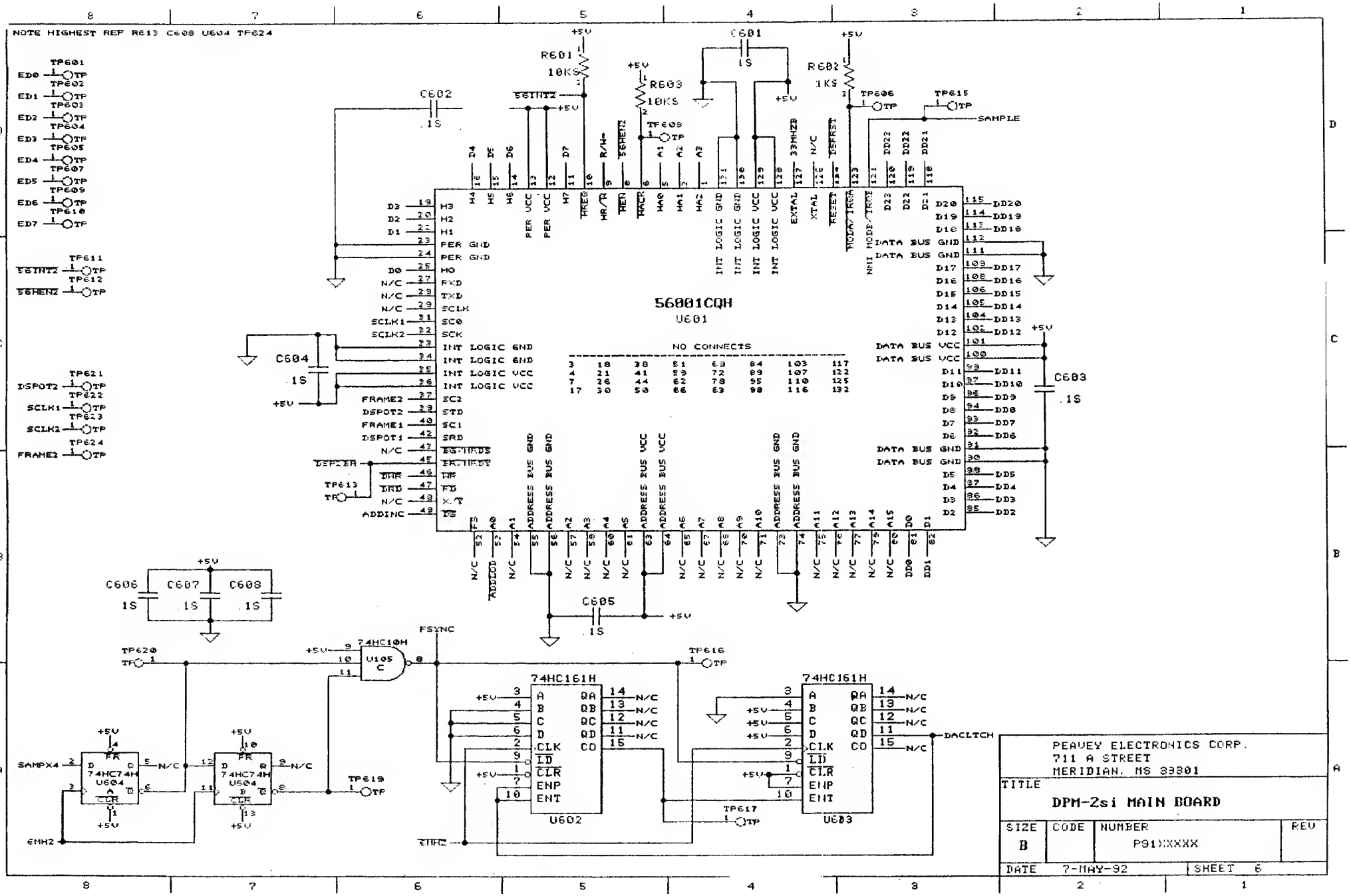
NOTE HIGHEST REF R613 C608 U604 TP624
56001CQH
U601
NO CONNECTS
R601
10KS
R602
1KS
R603
10KS
C601
1S
C602
.1S
C603
.1S
C604
.1S
C605
.1S
C606
1S
C607
.1S
C608
.1S
74HC10H
U105
74HC161H
U602
74HC161H
U603
74HC74H
U604
74HC74H
U604
SAMPLE
DACLTCH
FSYNC
SAMPX4
EMH2
ETH2
PEAVEY ELECTRONICS CORP.
711 A STREET
MERIDIAN, MS 39301
TITLE
DPM-2si MAIN BOARD
SIZE
B
CODE
NUMBER
P91XXXXX
REV
DATE
7-MAY-92
SHEET
6

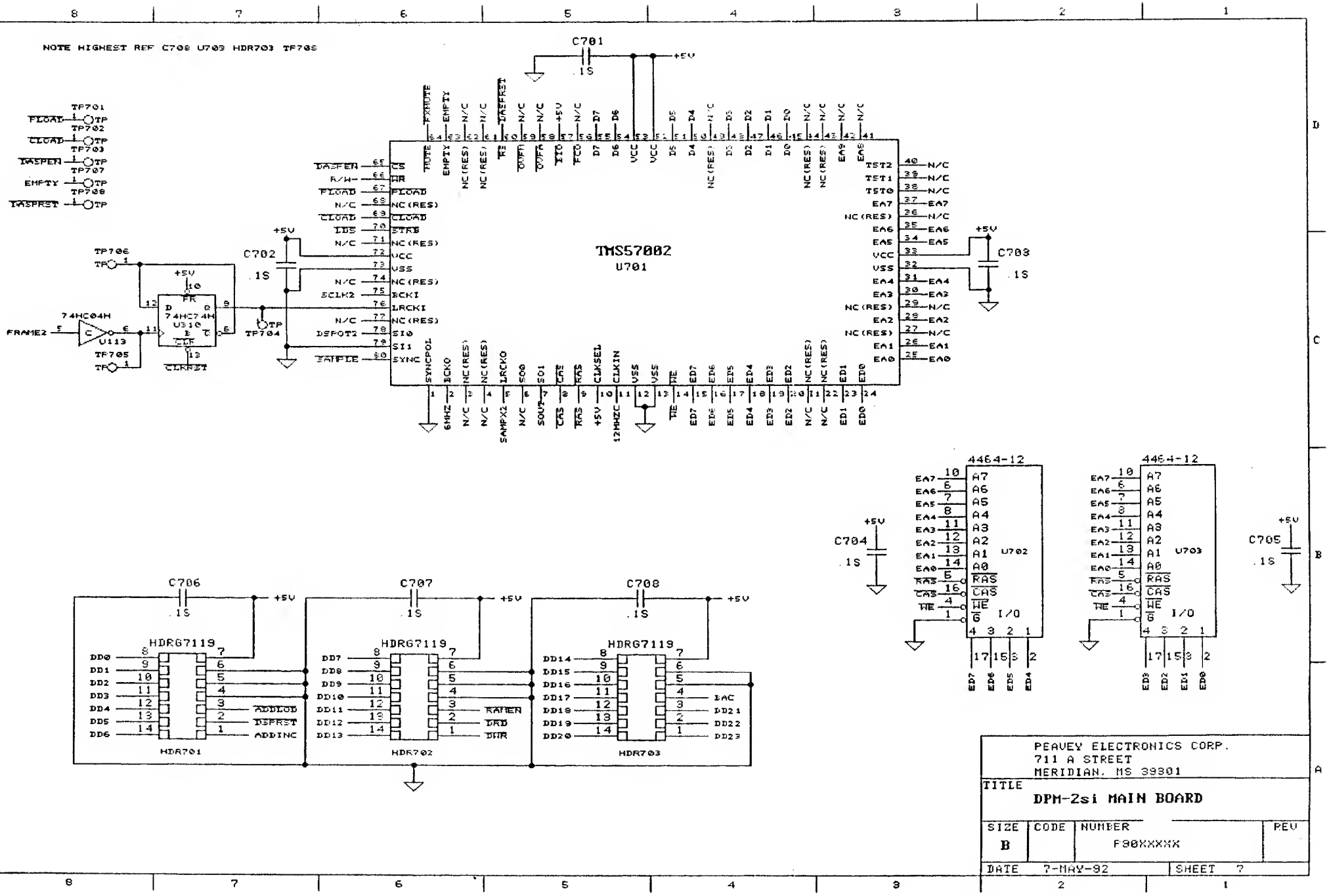

PEAVEY ELECTRONICS CORP. 711 A STREET MERIDIAN, MS 39301			
TITLE: **DPM-2si MAIN BOARD**			
SIZE: B	CODE:	NUMBER: P90XXXXX	REV:
DATE: 7-MAY-92		SHEET: 7	

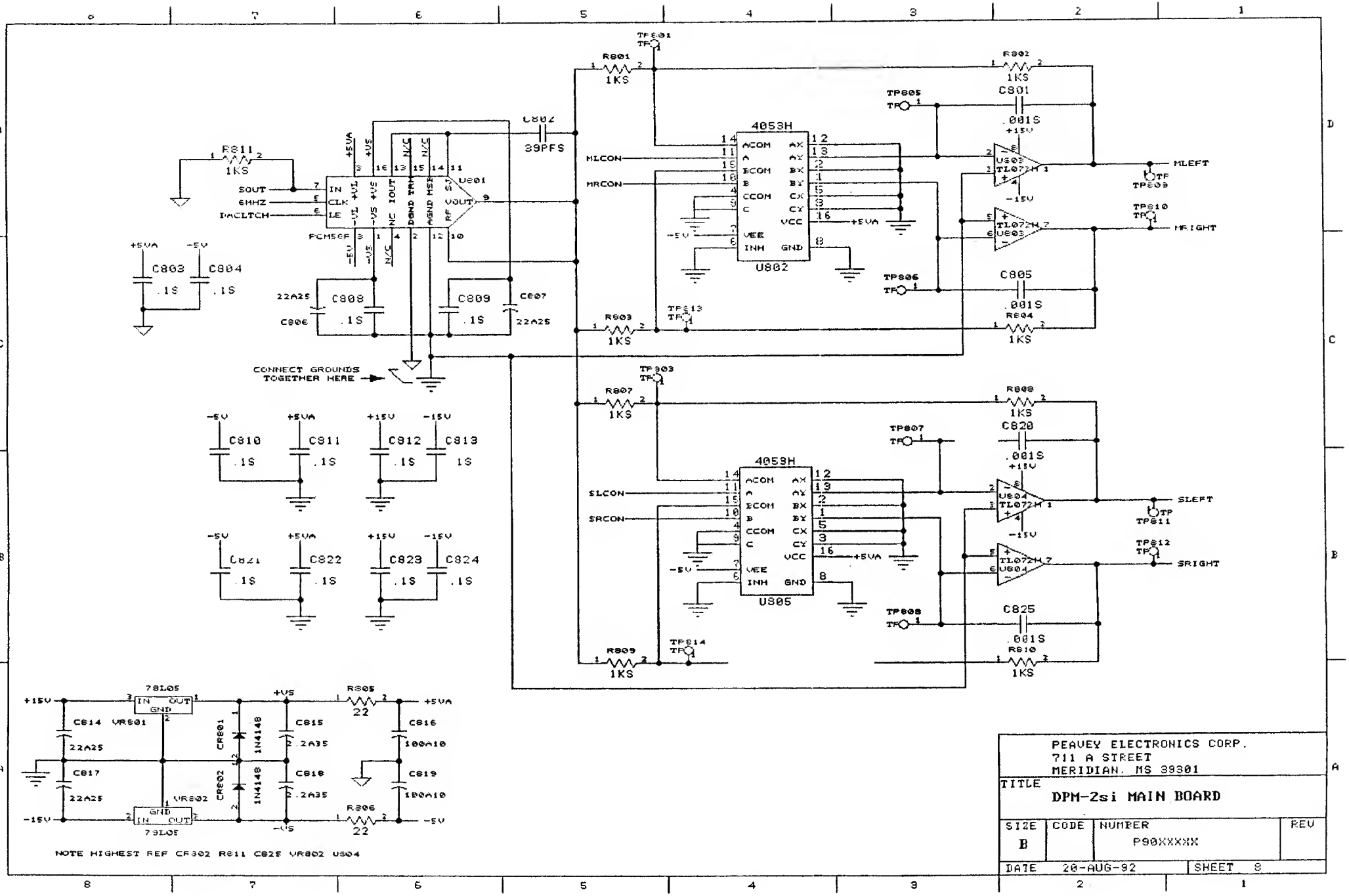

NOTE HIGHEST REF CR302 R811 C825 VR802 U804

PEAVEY ELECTRONICS CORP.
711 A STREET
MERIDIAN, MS 39301

TITLE
DPM-2si MAIN BOARD

SIZE	CODE	NUMBER	REV
B		P90XXXXX	

DATE 20-AUG-92 SHEET 8

NOTE HIGHEST REF CR905 R924 C917 Q902 U902 J902 TP916

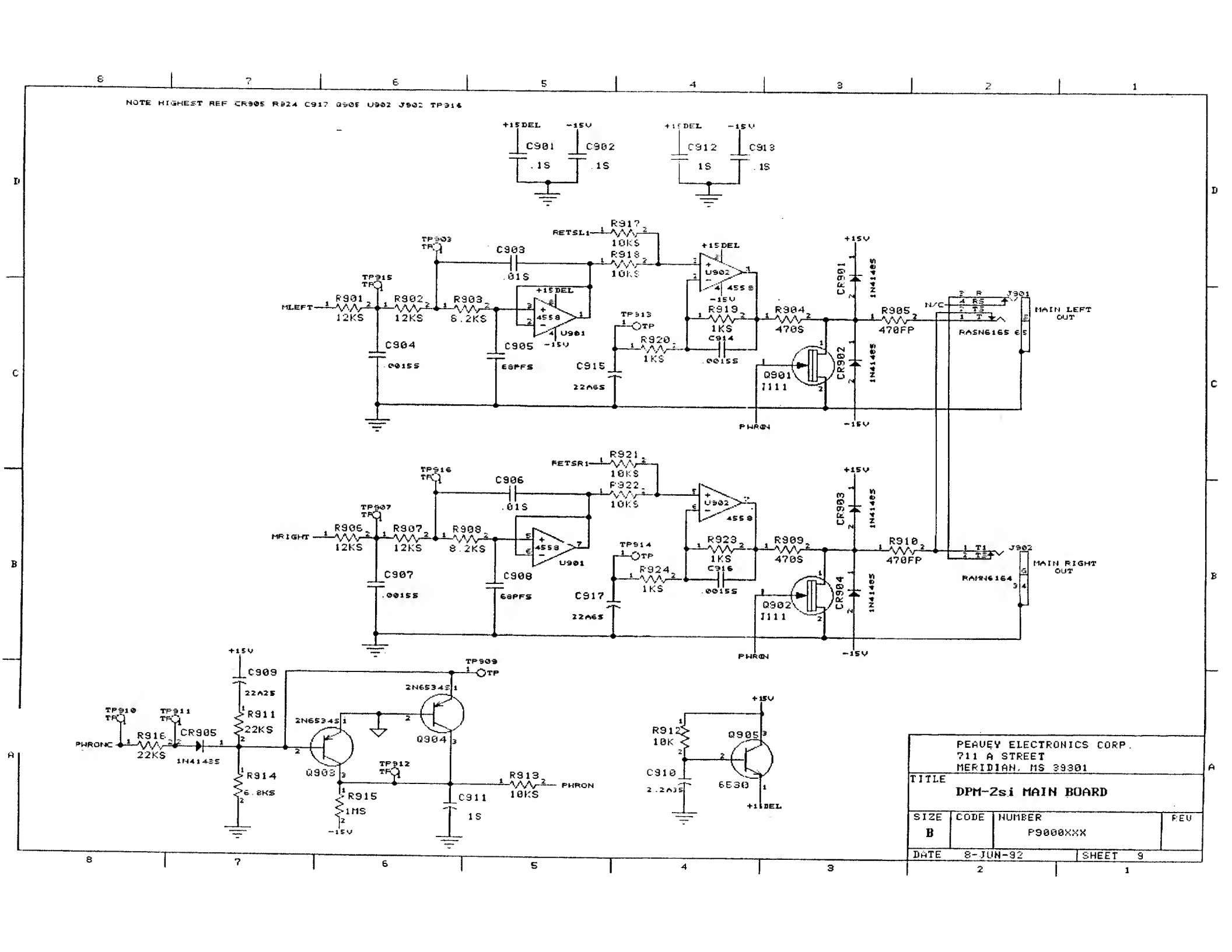

PEAVEY ELECTRONICS CORP. 711 A STREET MERIDIAN, MS 39301			
TITLE: DPM-2si MAIN BOARD			
SIZE: B	CODE:	NUMBER: P9000XXX	REV:
DATE: 8-JUN-92		SHEET: 9	

NOTE HIGHEST REF CR1005 R1016 C1011 Q1005 U1001 J1002 TPA04

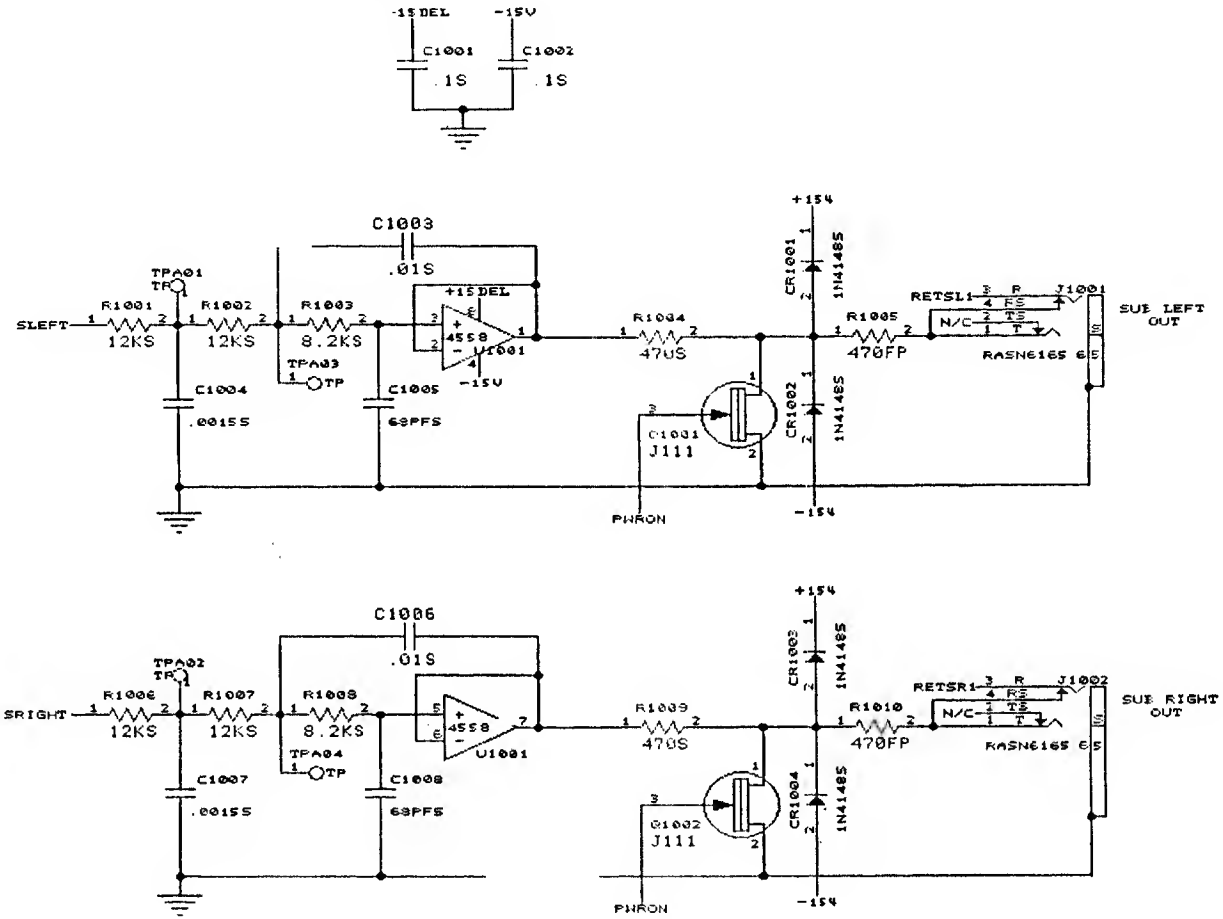

PEAVEY ELECTRONICS CORP. 711 A STREET MERIDIAN, MS 39301			
TITLE: DPM-2si MAIN BOARD			
SIZE: B	CODE:	NUMBER: P9000XXX	REV:
DATE: 7-MAY-92		SHEET: 10	

NOTE HIGHEST REF CR1113 R1109 C1114 Q1101 L1101 VR1103

CONFIDENTIAL

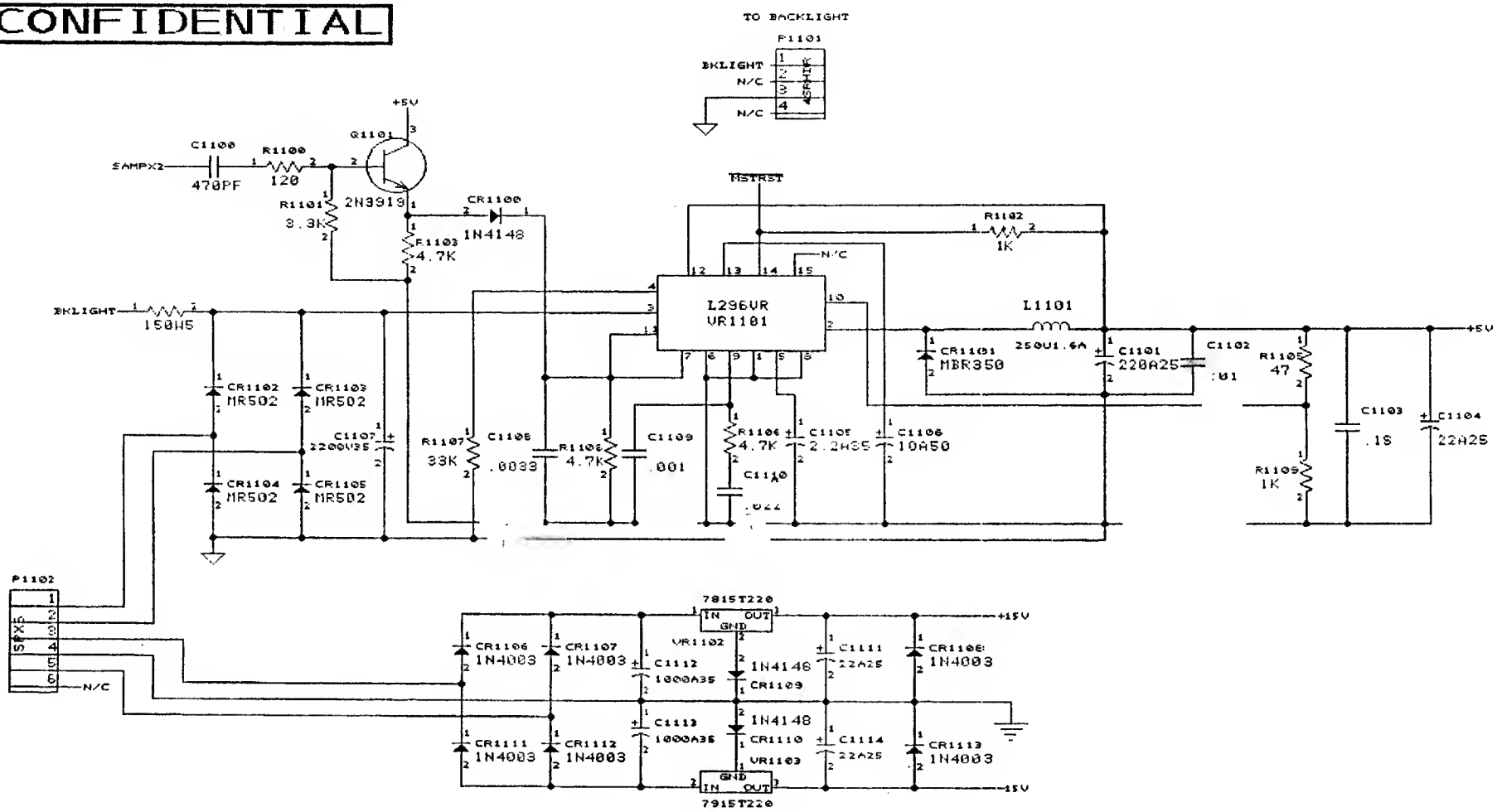

PEAVEY ELECTRONICS CORP. 711 A STREET MERIDIAN, MS 39301			
TITLE DPM-2si MAIN BOARD			
SIZE B	CODE	NUMBER P90XXXXX	REV
DATE 5-FEB-92		SHEET 11	

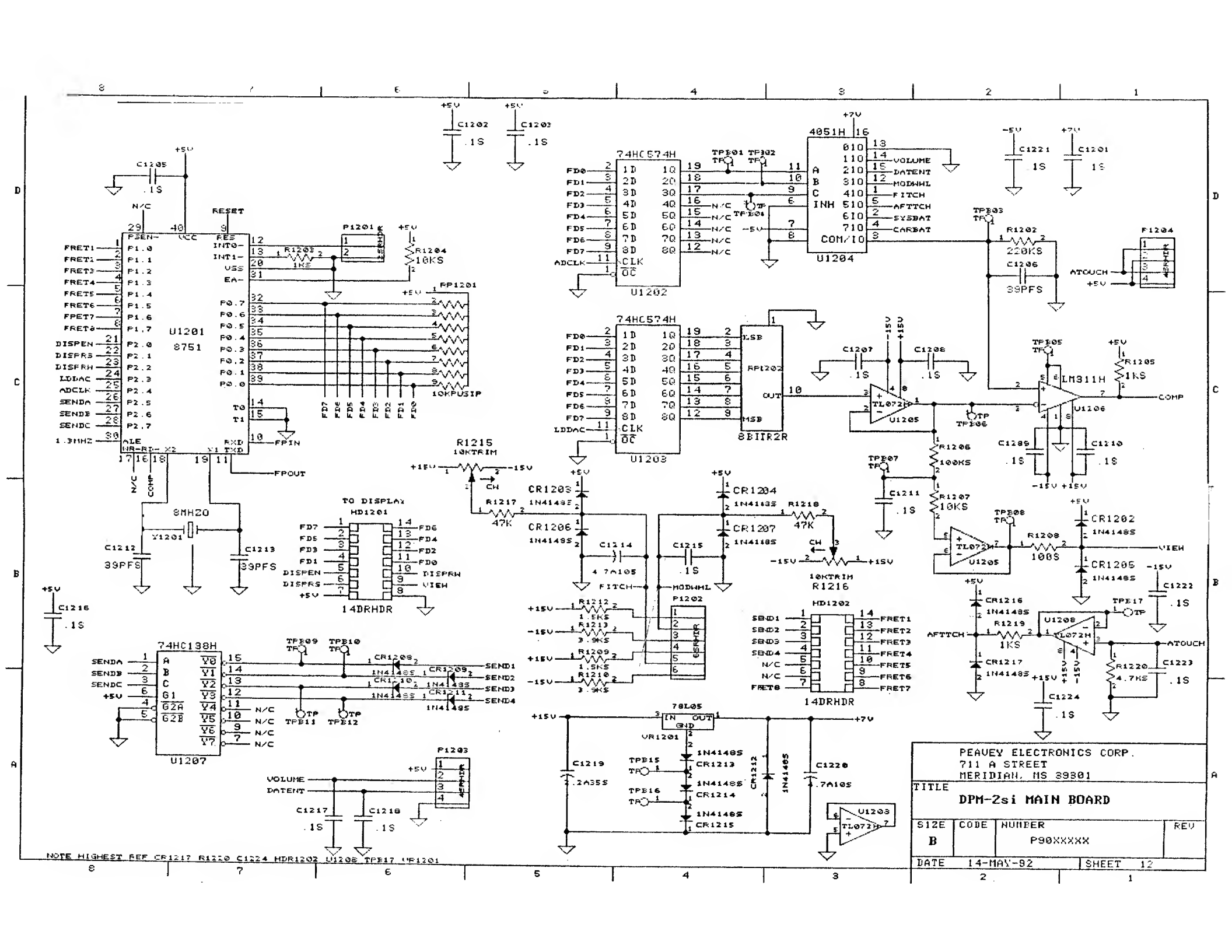
U1201
8751
U1202
74HC574H
U1203
74HC574H
U1204
4051H
U1205
TL072H
U1206
LM311H
U1207
74HC138H
U1208
TL072H
U1209
78L05
HD1201
14DRHDR
HD1202
14DRHDR
P1201
P1202
P1203
FP1201
RP1202
8BIIR2R
X1201
8MHZ0
R1215
10KTRIM
R1216
10KTRIM
TO DISPLAY
PEAVEY ELECTRONICS CORP.
711 A STREET
MERIDIAN, MS 39301
TITLE
DPM-2si MAIN BOARD
SIZE
B
CODE
NUMBER
P90XXXXX
REV
DATE
14-MAY-92
SHEET
12
NOTE HIGHEST REF CR1217 R1220 C1224 HDR1202 U1208 TPE17 VR1201

NOTE HIGHEST REF R1305 C1303 HDR1301 U1302

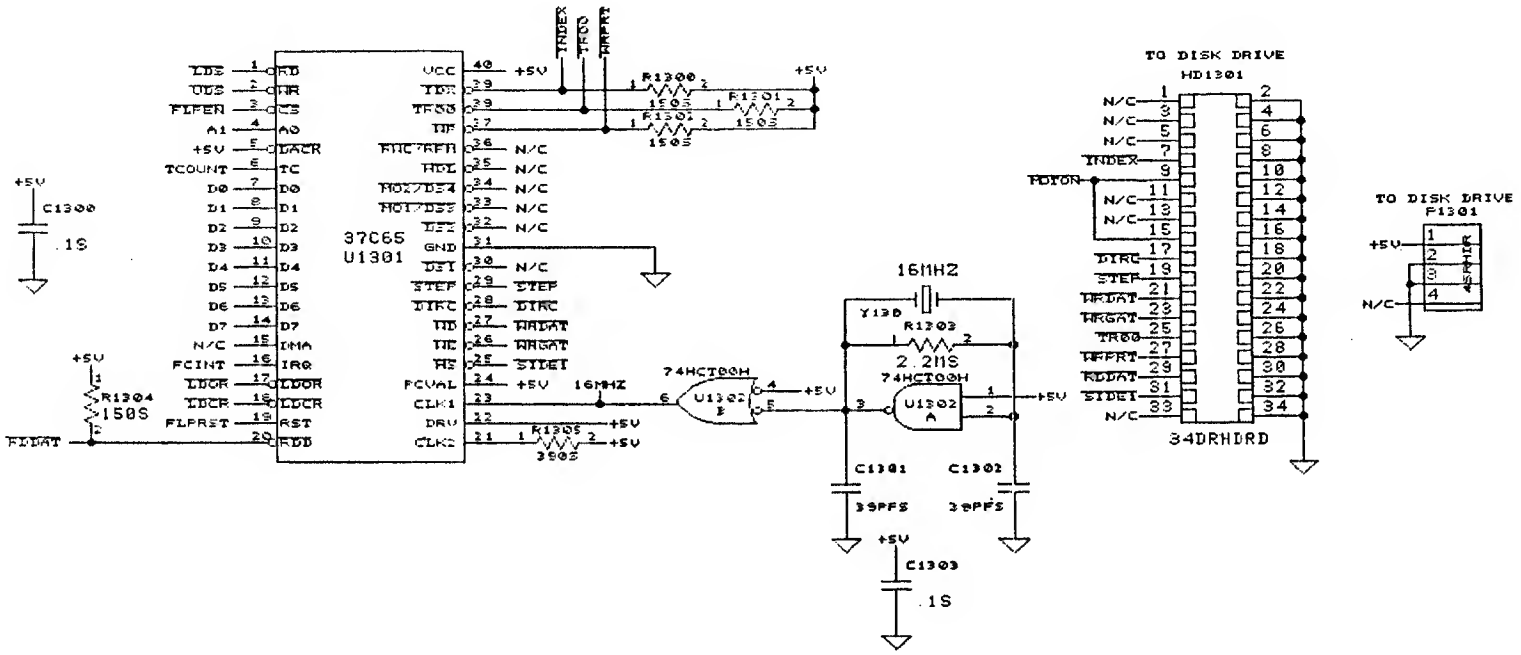

PEAVEY ELECTRONICS CORP. 711 A STREET MERIDIAN, MS 39301			
TITLE DPM-2si MAIN BOARD			
SIZE B	CODE	NUMBER P9100XXX	REV
DATE 25-FEB-92		SHEET 1S	

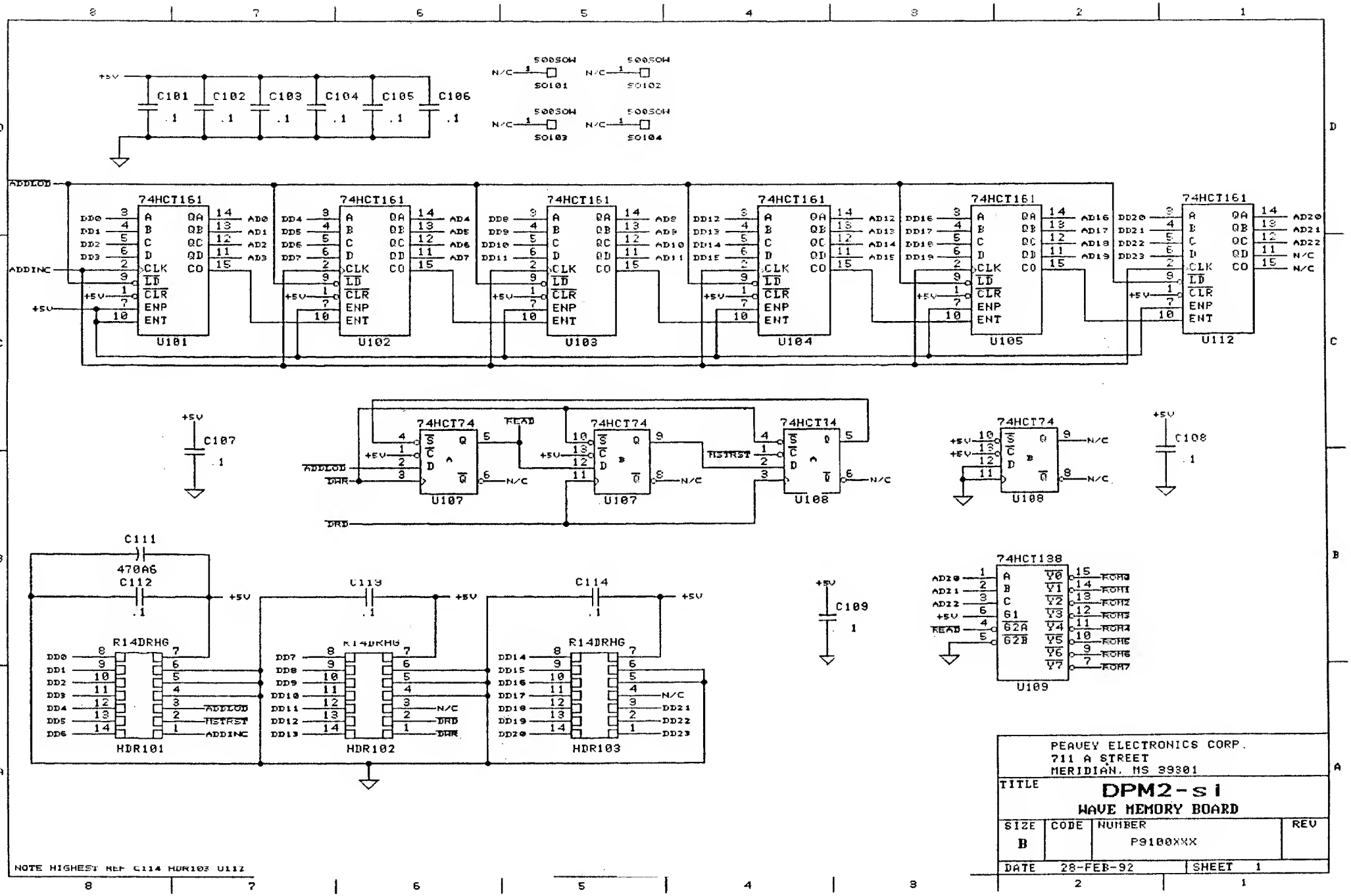
C101 .1
C102 .1
C103 .1
C104 .1
C105 .1
C106 .1
+5V
500SOW SO101
500SOW SO102
500SOW SO103
500SOW SO104
N/C
ADDLOD
ADDINC
74HCT161
U101
U102
U103
U104
U105
U112
C107 .1
74HCT74
U107
READ
DWR
DRD
74HCT14
U108
RSTRST
C108 .1
C111 470A6
C112 .1
C113 .1
C114 .1
R14DRHG
HDR101
HDR102
HDR103
C109 1
74HCT138
U109
PEAVEY ELECTRONICS CORP.
711 A STREET
MERIDIAN, MS 39301
TITLE
DPM2-si
WAVE MEMORY BOARD
SIZE B
CODE
NUMBER P9100XXX
REV
DATE 28-FEB-92
SHEET 1
NOTE HIGHEST REF C114 HDR103 U112

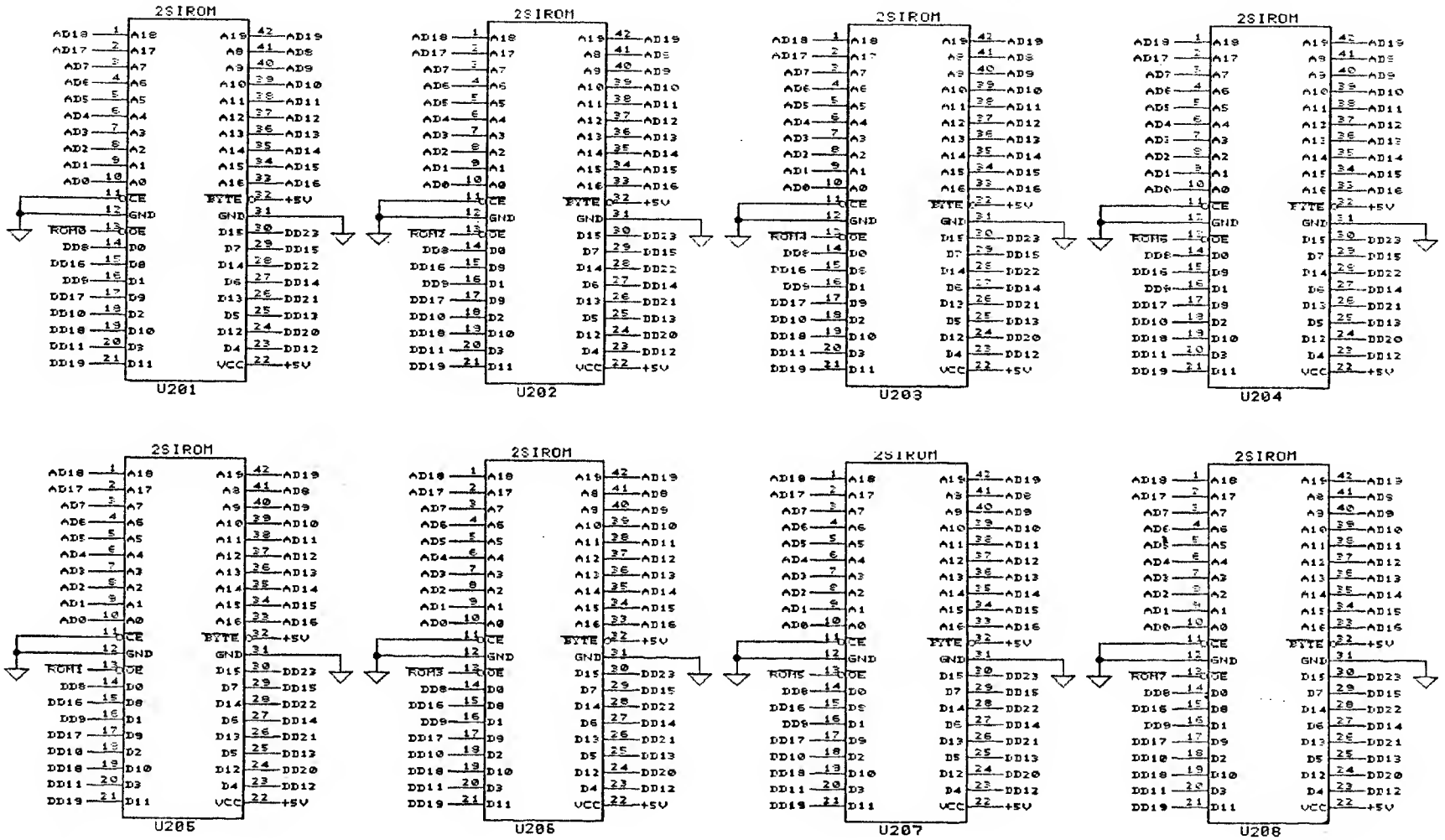

NOTE HIGHEST REF C208 U207

PEAVEY ELECTRONICS CORP.
711 A STREET
MERIDIAN, MS 39301

TITLE
DPM2-si WAVE MEMORY BOARD

SIZE	CODE	NUMBER	REV
B		P9100XXX	

DATE 28-FEB-92 SHEET 2

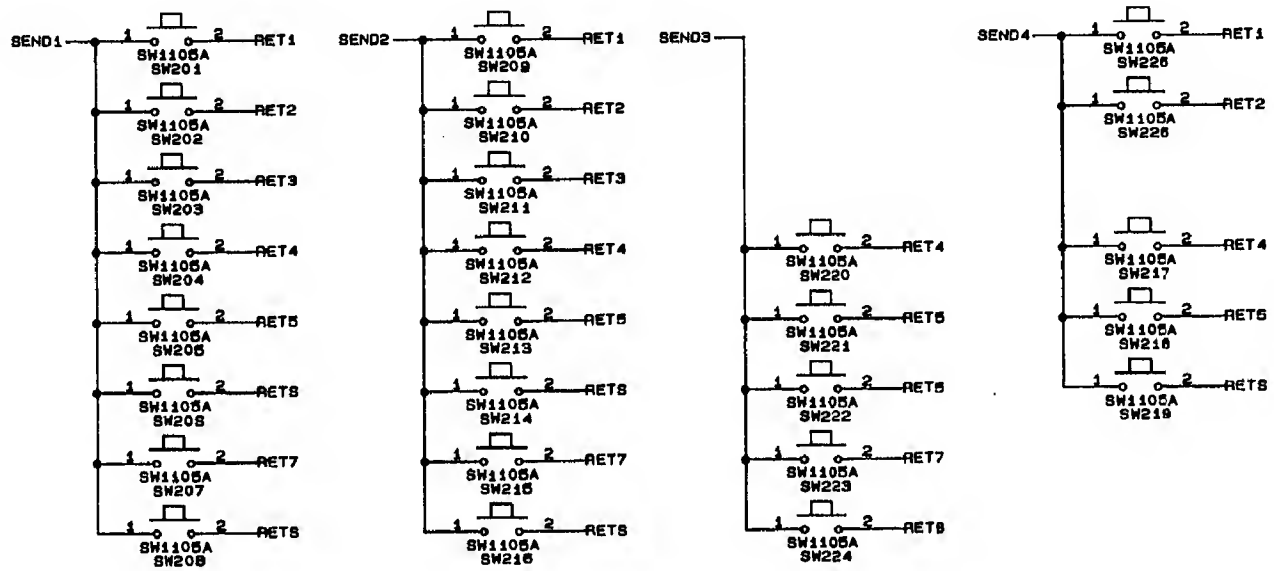

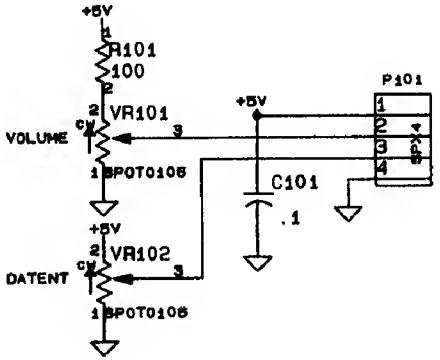

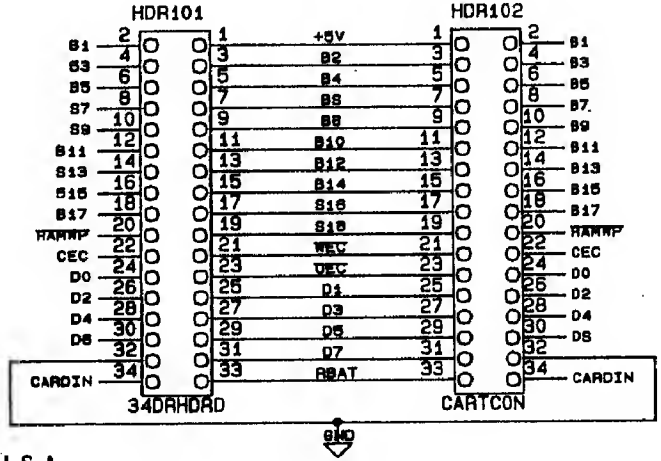

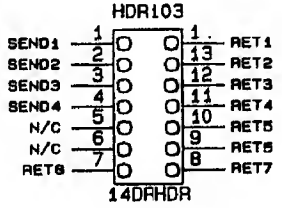

COPYRIGHT 1992 PEAVEY ELECTRONICS CORP. PRINTED IN U.S.A.

PEAVEY ELECTRONICS CORP.
711 A STREET
MERIDIAN, MS 39301

TITLE			
DPM 2 FRONT PANEL BOARD			
SIZE	CODE	NUMBER	REV
B		81511160	
DATE 12-APR-91		SHEET 1	

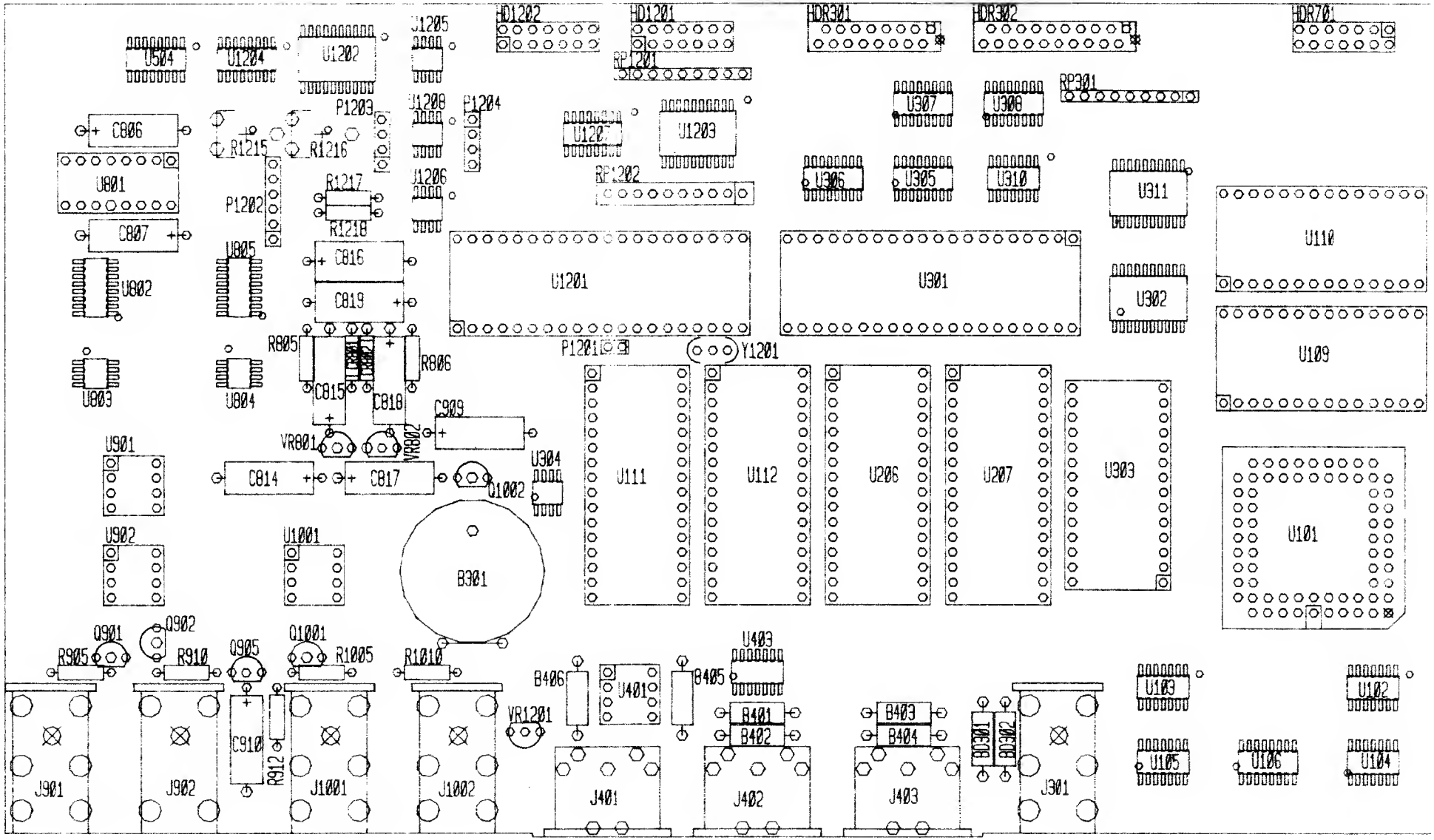

DPM Si PRIMARY LAYOUT PART 1

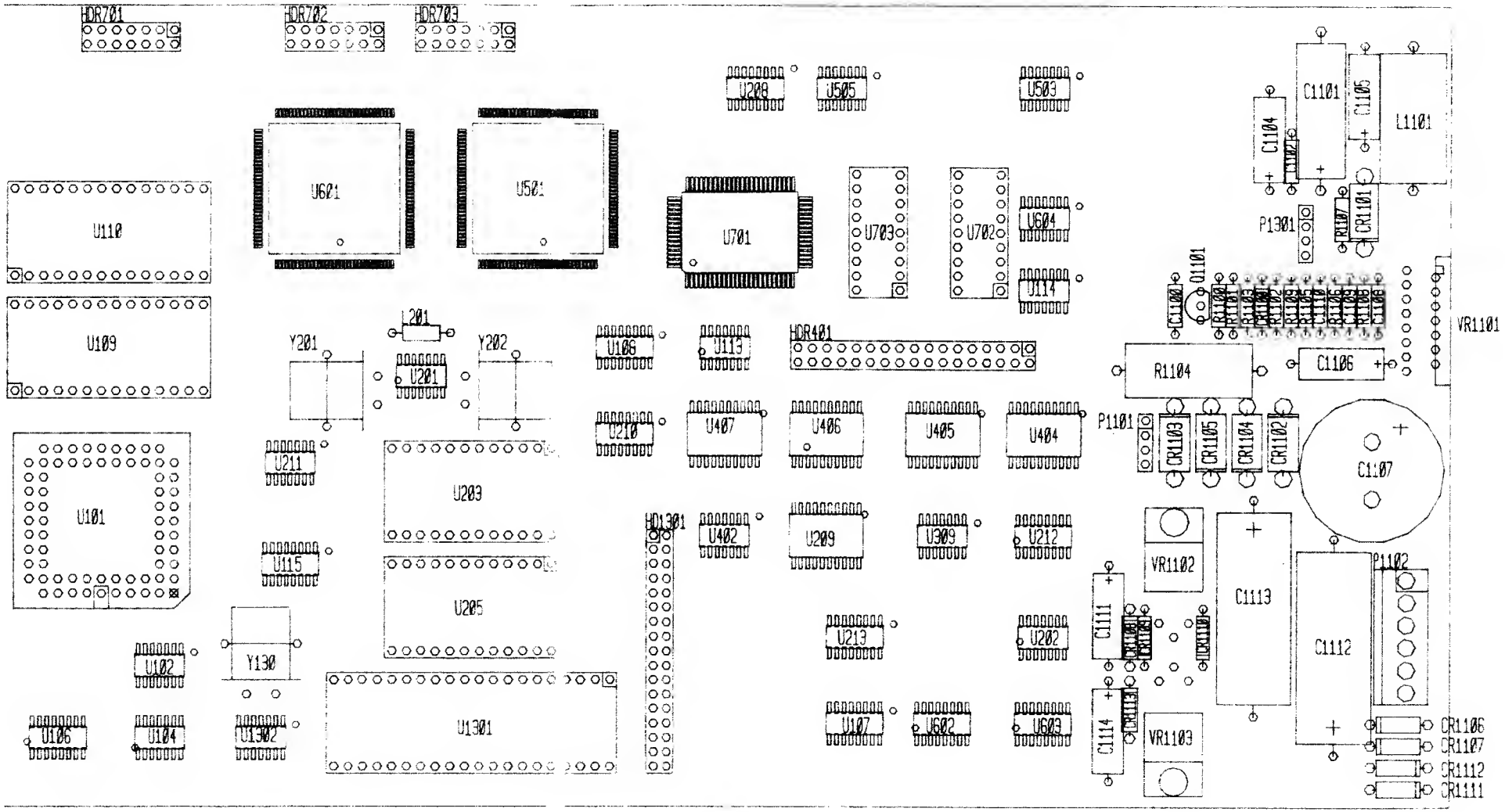

DPM Si PRIMARY LAYOUT PART 2

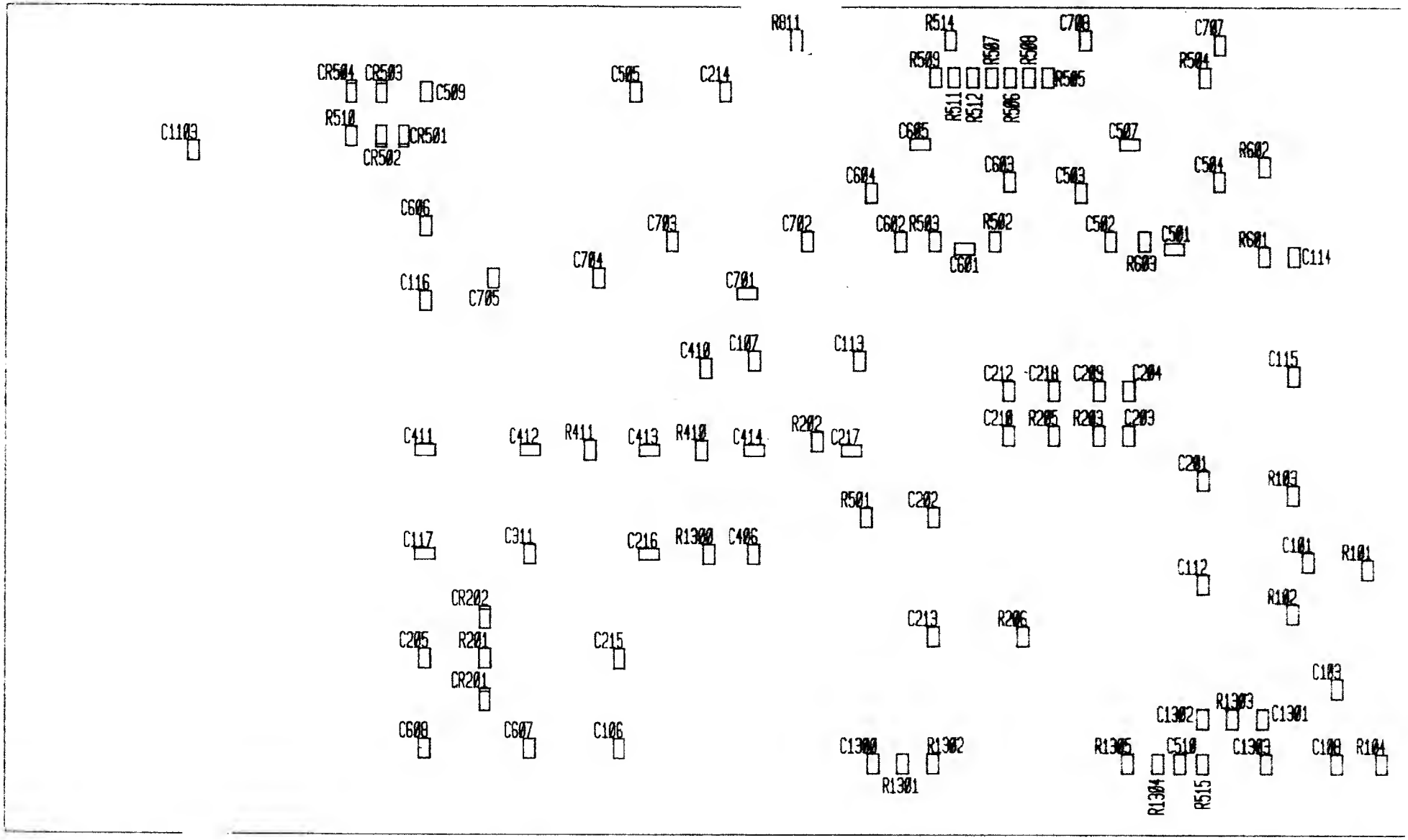

DPM Si SECONARY LAYOUT PART 1

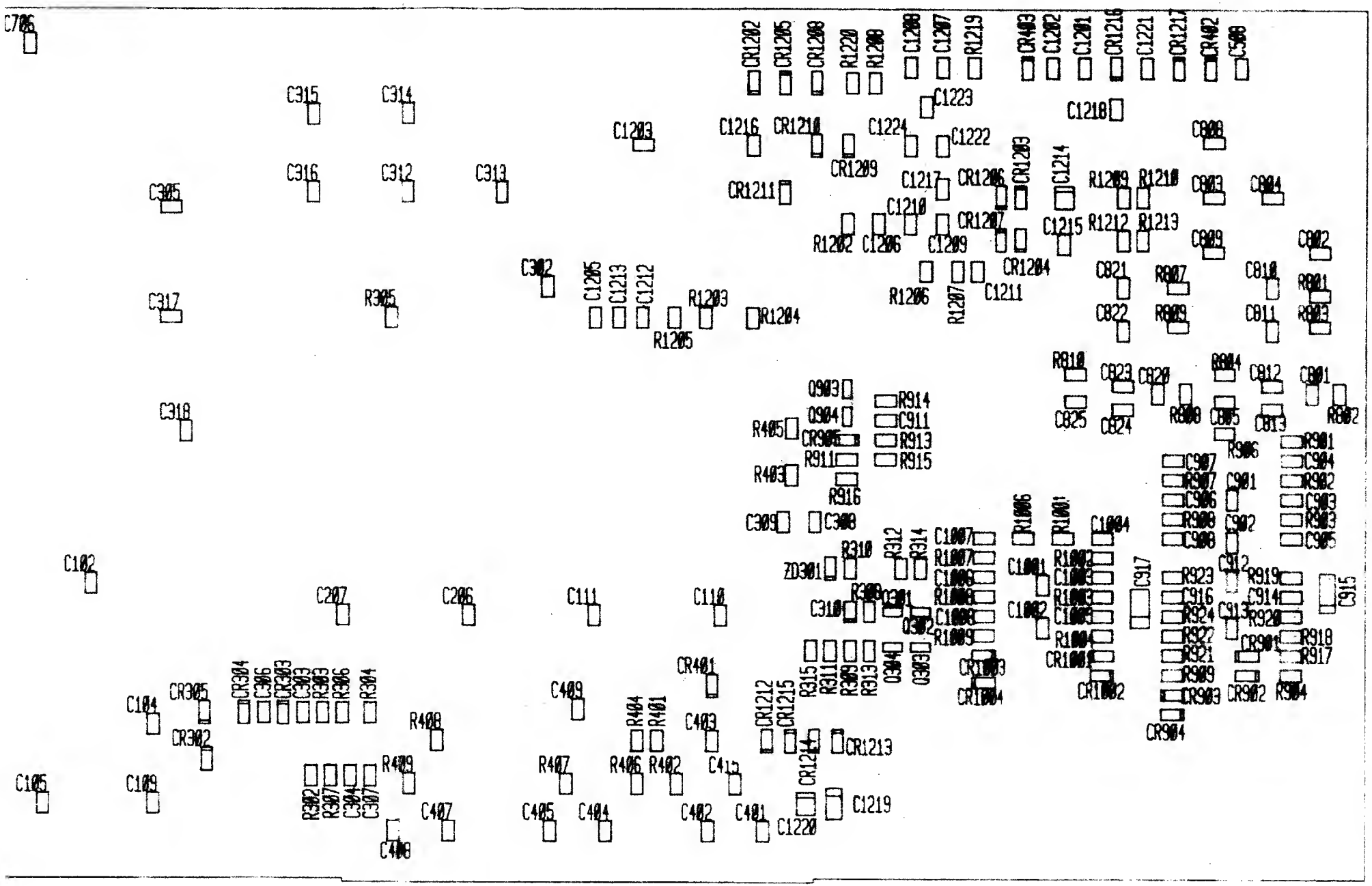

DPM Si SECONDARY LAYOUT PART 2